Combined Resistance

Exam code: 0625 & 0972

Download PDF

Written by: Leander Oates
Reviewed by: Caroline Carroll
Updated on 30 September 2024

SaveMyExams

Did this video help you? Yes No

Help me understand

Resistors in series & parallel

Combination of resistance in series

- When two or more components are connected in **series**:
  - The **combined** resistance of the components is equal to the **sum** of individual resistances

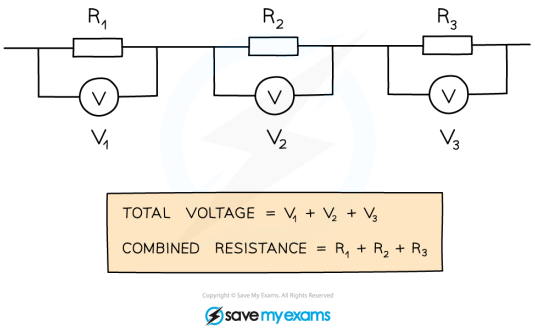

When several components are connected in series, their combined resistance is equal to the sum of their individual resistances

Combination of resistance in parallel

Stuck on something?
Ask questions and get help with exactly what you're revising.
Got it

- If two resistors of equal resistance are connected in parallel, then the combined resistance will halve

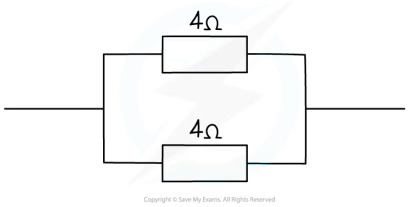

The above resistors will have a combined resistance of 2 Ω – half the value of each resistor in this case

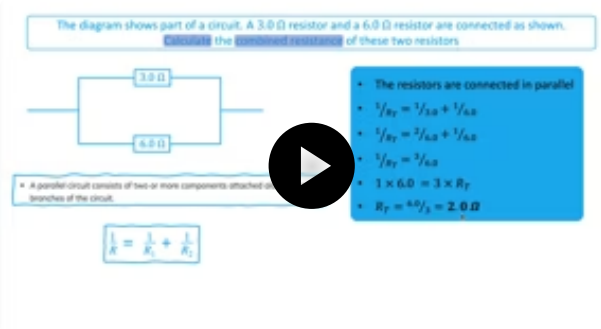

Did this video help you? Yes No

Determining resistance in parallel

Extended Tier Only

- To determine the combined resistance of any combination of two resistors, you must use the equation:

$$\frac{1}{R} = \frac{1}{R_1} + \frac{1}{R_2}$$

- Where:
  - R is the combined resistance in ohms, Ω
  - R_1 is the resistance of resistor 1 in ohms, Ω
  - R_2 is the resistance of resistor 2 in ohms, Ω

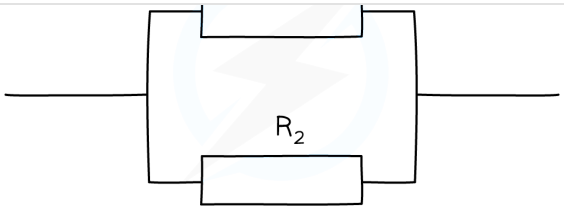

Copyright © Save My Exams. All Rights Reserved
save my exams

$$\frac{1}{R} = \frac{1}{R_1} + \frac{1}{R_2}$$

Copyright © Save My Exams. All Rights Reserved

The combined resistance is always less than the resistance of either resistor individually

- The method to calculate the resistance:
  - First find the value of $1/R$ (by adding $1/R_1 + 1/R_2$)
  - Next find the value of R by using the reciprocal button on your calculator (labelled either x^{-1} or $1/x$, depending on your calculator)

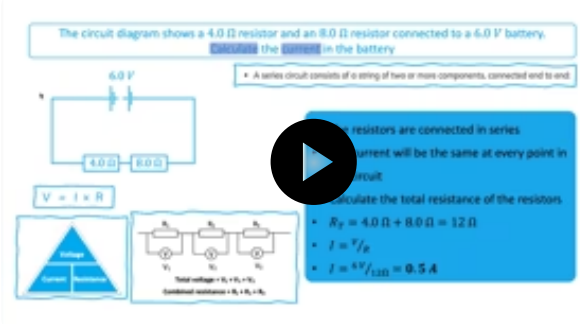

Did this video help you? Yes No

Teacher only

New! Exclusive Teacher-Only Questions

- Fresh, expert-written questions
- Students can't access them
- Fair accurate tests - built fast

Test yourself Flashcards

Was this revision note helpful? Yes No

Previous Next

Course Study tools All topics

Resources

Learning Hub
Scholarship
Join
Past Papers
Solution Banks
Sitemap

Dashboard

Overview
Brand ambassador
Profile
Subscription
Settings
Log out

Company

About us
Exam Specificity
Content Quality
Promotions
Jobs
Terms
Privacy
Cookie Policy
Help and Support

Subjects

Biology
Chemistry
Physics
Maths
Geography
English Literature
Psychology
All Subjects

© Copyright 2015–2026 Save My Exams Ltd. All Rights Reserved.